2024 Technical Regulations for Indian Touring Cars – ITC

The Following Articles of 2024 FMSCI Appendix J are applicable

Art.251 – Classification and Definitions
Art.252 – General Prescriptions for Production Cars(Group N), Touring Cars(Group A)
Art.253 – Safety Equipment (Groups N, A)
Art.254 – Specific Regulations for Production Cars (Group N)

All modifications are forbidden unless expressly authorized by the regulations specific to the group as mentioned below.

Art.1 – Eligible Vehicles & Classes

Only cars commercially sold in India and having basic Homologation or TDF data (Art.101 to 209 & Art.601 & 801) are eligible

The engine and power train position or location must be as supplied by manufacturer

Only 2-Wheel Drive Cars are permitted (either front wheel drive or rear wheel drive)

Turbocharging of an originally NA engine is permitted.

	Normally Aspirated Engine	Supercharged Engine
NATR-1	up to 1389 cm^3	up to 926 cm^3
NATR-2	Over 1390 cm^3 and up to 1609 cm^3	Over 927 cm^3 and up to 1072 cm^3
NATR-3	Over 1610 cm^3 and up to 2009 cm^3	Over 1073 cm^3 and up to 1339 cm^3
NATR-4	Over 2010 cm^3 and up to 2409 cm^3	Over 1340 cm^3 and up to 1606 cm^3
NATR-5	Over 2410 cm^3 and up to 2809 cm^3	Over 1607 cm^3 and up to 1873 cm^3
NATR-6	Over 2810 cm^3 and up to 3210 cm^3	Over 1874 cm^3 and up to 2140 cm^3

Art.2 – Dimensions & Minimum Weight

Wheel Base must be as per the manufacturers specification.

Track width is allowed to be increased by a maximum of 100mm overall from the Homologation / TDF data.

Track width is allowed to be increased by a maximum of 200mm overall from the Homologation / TDF data if 18inch rim is used.

The front Overhang measured from the front wheel centre line to the front extremity of the body work is allowed to be increased by maximum of 150mm over the manufacturers specification for fitment of a Splitter, Front Bumper Skirt, air dam etc,.

Rear Overhang must be as per the manufacturers specification.

i) Naturally Aspirated Vehicles minimum weight:

Normally Aspirated Engine	Minimum Weight
up to 1389 cm^3	880 Kgs
Over 1390 cm^3 and up to 1609 cm^3	930 Kgs
Over 1610 cm^3 and up to 2009 cm^3	980 Kgs

Over 2010 cm^3 and up to 2409 cm^3	1030 Kgs
Over 2410 cm^3 and up to 2809 cm^3	1080 Kgs
Over 2810 cm^3 and up to 3210 cm^3	1130 Kgs

ii) Super Charged Vehicles minimum weight:

Supercharged Engine	Minimum Weight
up to 926 cm^3	930 Kgs
Over 927 cm^3 and up to 1072 cm^3	980 Kgs
Over 1073 cm^3 and up to 1339 cm^3	1030 Kgs
Over 1340 cm^3 and up to 1606 cm^3	1080 Kgs
Over 1607 cm^3 and up to 1873 cm^3	1130 Kgs
Over 1874 cm^3 and up to 2140 cm^3	1180 Kgs

The minimum weight of the car measured will be as raced, with water, oil, fuel and the driver with completely safety gear (Helmet, inners, suit, gloves, shoes, balaclava etc.)

In order to balance performance, the FMSCI reserves the right to change the minimum weights at any point of time as deemed fit.

These minimum weights must be respected at all times during the event.

It is permitted to complete the weight of the car by one or more ballast weights provided that they are unitary blocks, fixed by means of tools rigidly fixed to the floor of bodyshell / chassis in a location clearly visible to the scrutineers, with the provision for sealing.

Maximum mass of a single ballast is 30kgs, Maximum mass of ballast at each mounting location is 30kgs and must respect drawing 253-65C.

Ballast must only be made of lead**(no other materials).**

The ballast must be attached to the bodyshell/chassis at least at two fixing points by bolts of at least grade 8.8 with a minimum diameter of 10mm, with counter plates, according to the principle of Drawings 253-65C

No ballast should have sharp edges and all the edges must have a radius of minimum 5mm

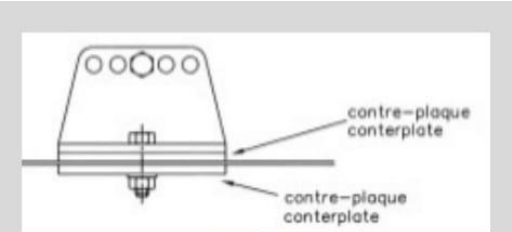

253-65C

The minimum area of contact between bodyshell /chassis and counter plate is 40cm^2 for each fixing point.

The Organisers/Technical Delegate have the right to weigh the cars at any time during the event.

Failing to meet the required weight regulations will result in disqualification or exclusion of the car for the relevant session.

Art.3 – Engine

Any Indian Engine with any Indian car (shell) sold in India including CBU is allowed.

Internals are free but the crankshaft and connecting rods are limited to be made out of steel. No exotic materials such as Titanium or carbon fiber are allowed for these components.

In the case where the vehicles are fitted with a turbo, A restrictor must be fitted. The Maximum ID shall be 31mm also in compliance with Art.13 (Induction system)

3.1-Engine & Gearbox Mounting

Adaptor plates and modification to output flanges, hubs, spacers and free. Engine mount and gearbox mount and their numbers are FREE

3.2-Compression Ratio

Compression Ratio is FREE

3.3-Cylinder Block

All modifications are permitted to the Cylinder Block, including addition or removal of material. Modifications such as drilling, welding, machining, porting etc. are FREE.

3.4-Maximum Bore Allowed

Re-boring of the engine is allowed, without this leading to the displacement exceeding the class maximum capacity.

3.5-Piston

FREE

3.6-Connecting Rod

FREE but limited to be made out of steel, No exotic materials such as Titanium or carbon fiber are allowed.

3.7-Crank Shaft

FREE but limited to be made out of steel, No exotic materials such as Titanium or carbon fiber are allowed.

3.8-Flywheel

FREE

3.9-Cylinder Head

All modifications are permitted to the Cylinder Head, including addition or removal of material. Modifications such as drilling, welding, larger valves, machining, porting etc. are FREE.

For example: the Suzuki G13B engines with imported dual overhead cams are not allowed. Any sub assembly /assembly which is available from the donor engine from a car marketed in India only can be used.

3.10-Fuel Injection System & Throttle body

FREE

3.11-Sensors & Actuators

Fitting of additional sensors and actuators are FREE

3.12-CAM Shaft

Camshaft(s), Cam sprockets are FREE

3.13-Intake & Exhaust Valves

Valves, valve springs, valve retainers, rockers, tappets are FREE

3.14-Intake Manifold

FREE,
Air filter and its plumbing is FREE, but must be in the confines of the engine compartment.

3.15-Exhaust System

FREE
Fitment does not entail the modification of other components except floor pan & running board (side sill).
The exit of the exhaust pipe should be behind the front wheel and ahead of the rear wheel on either side at the running board level.
Front Fender (only behind front wheel) at the running board level can be modified for exit of the exhaust pipe.
It is permitted to exit at the rear of the car below the bumper horizontal centre line.

3.16-Ignition System

FREE

3.17-Cooling System

Radiator Re-Location is FREE, But must remain within the Bodywork of the Engine compartment.
No other medium other than water is allowed to be used as a coolant.

3.18-Lubrication System

FREE
Dry Sump lubrication is permitted
Oil coolers can be fitted but must be in the confines of the engine compartment
Oil catch can/tank is mandatory

3.19-Induction System

Components of the Induction, NA / turbo system (only one turbocharger per vehicle is allowed) are free.
The restrictor design must comply with the points mentioned below.

1) All the air fed through the turbo and to the engine must pass through the restrictor only. The Technical Delegate can insist on the competitor to reveal all the air flow to the engine.
2) Any air found to bypass the restrictor, by way of a leak, intentional or unintentional, shall be considered as non-conformity.
3) The restrictor internal diameter shall be a maximum of 31mm and this diameter has to be maintained for a minimum length of 3mm, unless otherwise stated in the regulations.
4) This diameter must be complied with, regardless of the temperature conditions.
5) The fitment of the restrictor housing must be by way of bolts, on to the turbo housing. Threading the original housing for bolting the restrictor is permitted. The restrictor housing must be fitted, by using an intermediate ‘O’ ring, to ensure proper sealing. Removal of the restrictor housing may be necessary to satisfy the scrutineers of the method of sealing of air intake into the turbo.

6) Failure of the sealing methods used, which allow additional air by passing the restrictor, will lead to nonconformity.
7) Fitment of the restrictor housing by way of grub screw is not permitted.
8) Holes for sealing must be provided in at least two of the bolts of the restrictor housing, adjacent to one another, which would ensure that the housing cannot be removed without cutting the seal and removal of bolts.
9) Sealing of the compressor housing to the body of the turbo will be done by sealing two adjacent bolts. One seal may be used to seal all the four bolts (2 Bolts for Restrictor to turbo housing and the 2 bolts for turbo housing to the main body).
10) The diameter of the holes provided for sealing in the bolts shall be no more than 3 mm
11) It will be responsibility of the competitor to ensure the sealing is done in a way which will not allow removal of the sealed components without breaking the seals.
12) The restrictor must be made from a single homogeneous piece aluminium material and may be pierced solely for the purpose of mounting and sealing.
13) **All the air necessary for feeding the engine must pass through this restrictor which must respect the following:**

- See Drawing 254-4.
- The maximum internal diameter of the restrictor is 31mm.
- This diameter must be maintained for a minimum length of 3 mm.
- This length is measured upstream of plane A.
- Plane A is perpendicular to the rotational axis of the turbocharger and is at a maximum of 47 mm upstream of plane B, measured along the neutral axis of the intake duct.
- Plane B passes through the intersection between the most upstream extremities of the wheel blades and a cylinder of 31mm diameter the centre line of which is the rotational axis of the turbocharger

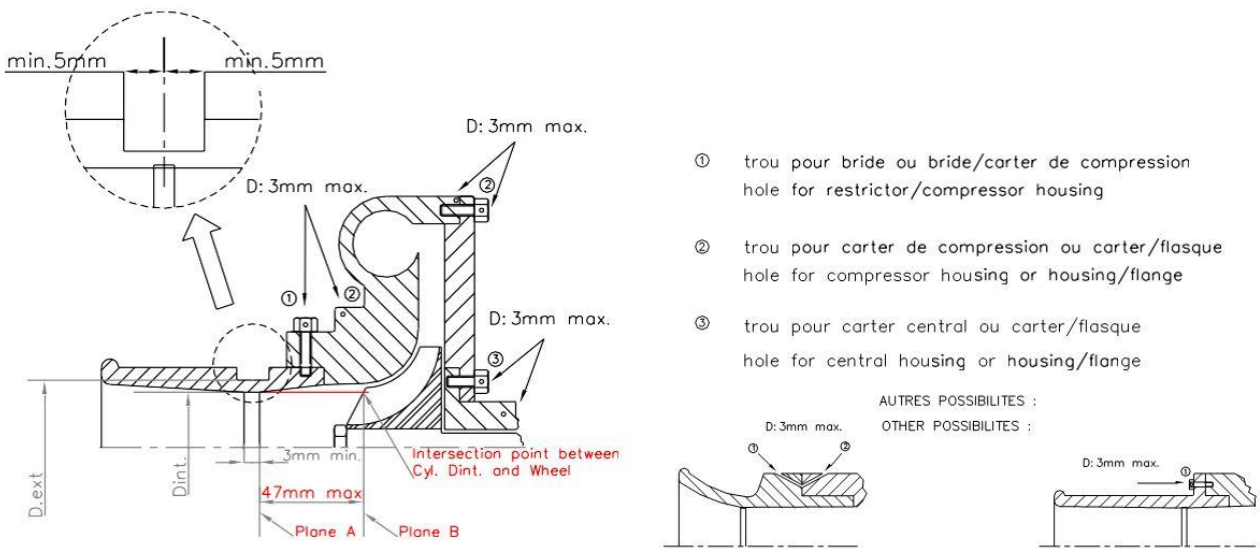

254-4

- This diameter must be complied with, regardless of the temperature conditions.
- The external diameter of the restrictor at its narrowest point must be a minimum of 39mm , and must be maintained over a distance of 5 mm to each side.
- The mounting of the restrictor onto the turbocharger must be carried out in such a way that two screws have to be entirely removed from the body of the compressor, or from the restrictor, in order to detach the restrictor from the compressor housing.
- Attachment by means of a needle screw is not authorised.

- For the installation of this restrictor, it is permitted to remove material from the compressor housing, and to add it, for the sole purpose of attaching the restrictor onto the compressor housing. The heads of the screws must be pierced so that they can be sealed.

- The restrictor must be made from a single homogeneous piece material and may be pierced solely for the purpose of mounting and sealing, which must be carried out between the mounting screws, between the restrictor (or the restrictor/compressor housing attachment), the compressor housing (or the housing/flange attachment) and the turbine housing (or the housing/flange attachment) (see Drawing 254-4).

Inter Cooler:
Addition of Air to Air inter cooler / Air to water inter cooler OR a combination of both is permitted to be used in the Turbo system. This cooling is for the air that has been compressed by the turbocharger
Plain water (only in liquid form) to be used for Air to water Inter cooler system
The Inter cooler/Inter cooler Radiator assembly should be fitted between the fire wall and confines of the front bumper..
No external method of cooling the above system by using any solid, liquid or gas cooling agent from outside is prohibited

Art.4 – Fuel Circuit

Fuel FREE

4.1-Fuel Tank

The fuel tank can be modified or completely changed (eg. fabricated). It can be either in the original location or in the spare wheel well. If modified/fabricated/changed, the fuel tank must not have any leakage during regular operation. If modified/fabricated/changed, a fire wall must be in place to ensure the passenger compartment is protected. The location of the fuel filler can be changed as long as the fuel is NOT FILLED from inside of the passenger compartment.

FIA APPROVED SAFETY FUEL TANKS (recommended for 2023)
Must be equipped with an FT3-1999, FT3.5-1999 or FT5-1999 safety fuel tank.
Modifications necessary for its installation must not exceed those allowed by Articles 254 of the FMSCI Regulations.(recommended)

From 01.06.2024

~~The fuel tank can be modified or completely changed (eg. fabricated). It can be either in the original location or in the spare wheel well. If modified/fabricated/changed, the fuel tank must not have any leakage during regular operation. If modified/fabricated/changed, a fire wall must be in place to ensure the passenger compartment is protected. The location of the fuel filler can be changed as long as the fuel is NOT FILLED from inside of the passenger compartment.~~

~~**FIA APPROVED SAFETY FUEL TANKS (recommended for 2023)**~~
~~Must be equipped with an FT3-1999, FT3.5-1999 or FT5-1999 safety fuel tank.~~
~~Modifications necessary for its installation must not exceed those allowed by Articles 254 of the FMSCI Regulations.(recommended)~~

As supplied by manufacturer, as per Homologation/TDF
or

FIA approved Safety Fuel Tanks
Must be equipped with an FT3-1999, FT3.5-1999 or FT5-1999 safety fuel tank.
Modifications necessary for its installation must not exceed those allowed by Articles 254 of the FMSCI Regulations.

4.2-Fuel Pump

FREE

Art.5 – ECU, Wiring Harness & Electrical Equipment

5.1-ECU & Wiring Harness

FREE-including the wiring harness

5.2-Battery

The battery may be relocated, provided it is securely fastened and fully enclosed in a non-conductive enclosure as stated below.

i)Location of the battery:
• Battery must be located in its original location or in the cockpit.
• If Installed in the cockpit, the battery must be situated anywhere behind the base of the driver's or co-driver's/passenger seat.

ii)Battery fixing:
• Battery must be securely fixed and the positive terminal must be protected.
• If the battery is moved from its original position, it must be attached to the body using a metal seat and two metal clamps with an insulating covering, fixed to the floor by bolts and nuts.
• The insulation used for covering the battery must be of fire proof material. In case of any dispute concerning on the fire proof material, the decision of the FMSCI Chief Scrutineer/Technical Delegate will be final.
• For attaching these clamps, metallic bolts with a diameter of at least 8mm must be used, and under each bolt, a counterplate at least 3mm thick and with a surface of at least 20cm² beneath the metal of the bodywork.
• If the wet battery is moved from its original position into cockpit it must be rigidly fixed and the entire battery must be covered in a leak proof casing and the positive terminal must be protected.

Art.6 – Power Train

6.1-Driven Wheels

Only 2-Wheel Drive Cars are permitted (either front wheel drive or rear wheel drive)
In case of 4-Wheel drive car is used the competitor can choose either front wheels or rear wheels as driven wheels.

6.2-Clutch Assembly

FREE

6.3-Gearbox

Gearbox FREE, The Internals are completely FREE
Any Gear box is permitted, Automatic or Manual.
Shift Mechanism is FREE

6.4-Differential

LSD's are allowed and the type, make and functions are FREE

6.5-Transmission Shafts

FREE, material of the drive shafts must be as supplied by the manufacturer

Art.7 – Axles & Suspension

7.1-Suspension System

Suspension System – its mounts and components are FREE

Material restricted to cast iron, steel, aluminium and aluminium alloy. No exotic materials (eg. Titanium or composite).

Ride height free. Ground clearance- No part of the car must touch the ground when all the tyres on one side are deflated. This test shall be carried out on a flat surface under race conditions (occupant on board).

Dampers Free. Up to 4 way adjustable permitted.

Electronic control of dampers not permitted. Cockpit adjustment of dampers not permitted. Modification of suspension geometry is permitted.

7.2-Axle Assembly

FREE

7.3-Stabilisers

Stabilizer bar FREE front & rear (you are allowed to fit rear stabilizer/anti-rollbar)

Art.8 – Running Gear

8.1-Wheels(Rims & Tyres)

Maximum of 18inch is allowed

Specified by the Organizer

Rim FREE

Wheels made from forged magnesium are forbidden(including OE).

No portion of the tyre above the centre line must be visible when viewed from the top(see drawing 8.1-1)

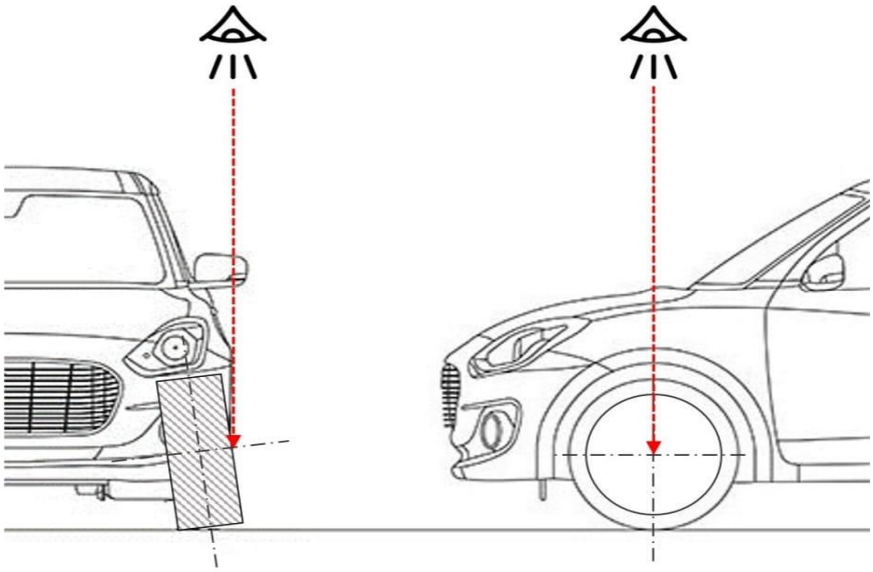

8.1-1

8.2-Wheel Assembly(Hub & Knuckle)

Wheel spacers between wheel and hub is permitted by respecting the maximum Track width allowed as per the Article-2

Fixing of Hub ring is permitted and should be fixed on the alloy wheel. Hub rings material FREE.

8.3-Brake System

FREE

But must be Dual circuit Brakes

Handbrake if fitted the locking mechanism must be disabled. A hydraulic fly off hand brake is permitted.

8.4-Steering System

FREE

The steering wheel is free.

The locking system of the anti-theft steering lock must be rendered inoperative/removed.

Art.9 – Body Work

9.1-Interior

1. The front & rear passenger seat(s) must be removed.
2. The removal of door pads, soundproofing, insulating material and carpeting is permitted.
3. Extra gauges or meters are permitted.
4. Spare wheel, AC, heating system and all its accessories may be removed.
5. Rear doors & Front passenger & driver doors glasses and the rear windshield may be replaced with clear Polycarbonate sheet of minimum 3mm thickness and must be fastened with rivets or bolts. The use of transparent or colorless anti shatter film on the side windows is mandatory if the original glass is used.
6. The Rear doors & Front doors winder mechanism may be removed.
7. Dead pedal for driver comfort is permitted.
8. Dash board, its console and its fittings may be removed.
9. Front & Rear fixed Quarter glasses may be replaced with Perspex.
10. Fixing of Driver Hydration bottle is permitted but the bottle must be removable only by using tools. (no press fits allowed).
11. It is permitted to modify/replace the clutch/brake/throttle pedals individually or as an assembly to enable modifications to the clutch system/assembly, brake system/assembly and Throttle system/assembly.
12. Fitting of FIA approved nets on OE door/fibre glass door is permitted.

9.2-Exterior

1. Only the rear doors, front passenger & driver doors, front bonnet, front fenders and the rear boot may be made of fiberglass, steel, aluminium or carbon fiber. The front passenger door should be openable from both inside and outside. Rear door maybe replaced with a copy made of fiberglass, composite, steel, aluminium, carbon fibre or a combination and maybe securely fastened and/or bonded to the body. Driver door should be made of steel / Aluminium(should be openable from both inside and outside).
2. Original bumpers may be replaced by Fiberglass, steel, Aluminium, or composites. Change of bumper shape is permitted. The bumper should be removable; it is permitted to

integrate with other body panels. The bumper can be removable separately or can be integrated with other body parts as one assembly. But should be removable out as one integrated part.

3. Headlights can be removed. However the opening must be covered with a Fiberglass/metal plate of same shape/profile and size as OE Headlights and be safely secured, unless used as air intake ducts. However, headlights must be fixed and working for night racing and need not be OE
4. Weight reduction by removal of material in the body shell is permitted.
5. Scoops/Air vents can be incorporated anywhere on the body work.
6. Body work modifications are permitted to accommodate larger wheel and tyre size. No portion of the tyre above the centre line must be visible when viewed from the top(see drawing 23-8)
7. Rear wings, front skirting, side skirting, rear Diffuser and underbody tray/flat floor are permitted. Material can be Steel, Aluminum, Fiberglass, Composites, Wood or a combination, This Should be in compliance of Art.2.
8. Fixed Aero devices can be fitted on to the car, provided adjustments can only be made when the car is stationary
9. The A, B, C pillar of the original donor chassis of the car cannot be modified in any way.
10. Fender linings may be removed. If fitted shape and material are FREE.
11. Driver ventilations are allowed at front driver window, front passenger side window, rear door windows, rear windshield, front quarter glass, rear quarter glass and on the roof top. Maximum opening for each driver ventilation is 225 sq. cm
12. Fixing of 3mm Perspex by replacing the window glass is permitted on the driver side door with fibre glass doors, fitting of FIA approved nets on OE doors/fibre glass doors is permitted.
13. Rear view visibility must be ensured by two external rear-view mirrors (one on the right and one on the left). The rear-view mirrors may be replaced with any aftermarket replacements, as long as the viewing area is equal to or more than the OE part.
14. An Inside rear-view mirror is mandatory
15. Heat protective/damping shield is allowed to be fixed on the engine compartment firewall side.

Fiberglass Specification

Fiberglass recommended to be a minimum of 3mm thickness.
Fire Retardant(FRR) is Recommended in Fiberglass making.
Ribs in the Fiberglass bonnet is MANDATORY.

THE TECHNICAL DELEGATE (in his absence the Chief Scrutineer) IS THE FINAL AUTHORITY ON THE CONDITION, STRUCTURE AND SAFTY OF THE MODIFIED PARTS.

Art.10 – Safety Requirements

As per 2024 FMSCI Racing Regulations Appendix-J Art 253 Safety Equipment (Group N, A) and As per FMSCI 2024 Safety Requirements for 4Wheeler.

10.1-Driver Safety Equipment

As per FMSCI 2024 Safety Requirements for 4Wheeler.
Its mandatory to use FHR along with the Helmets compatible to use with FHR as per FIA standards.

10.2-Roll cage

As per 2024 FMSCI Racing Regulations Appendix-J Art 253 Safety Equipment (Group N, A) Art-8.Safety Cages

10.3-Seat & Seat Belt

As per FMSCI 2024 Safety Requirements for 4Wheeler.

From 01.06.2024 Seat Anchorage point and Seat support must only as per the following methods

1) If OEM seat anchorage points are not used(seat support must be fixed on to the cross member):

It must follow the drawing 253-65B of FMSCI Art 253-Safety Equipment(Group N, A)

The seat support must be fixed on to the anchorage points of cross member for fixing seats via at least 4 mounting points per seat, using bolts minimum M8 of grade 8.8

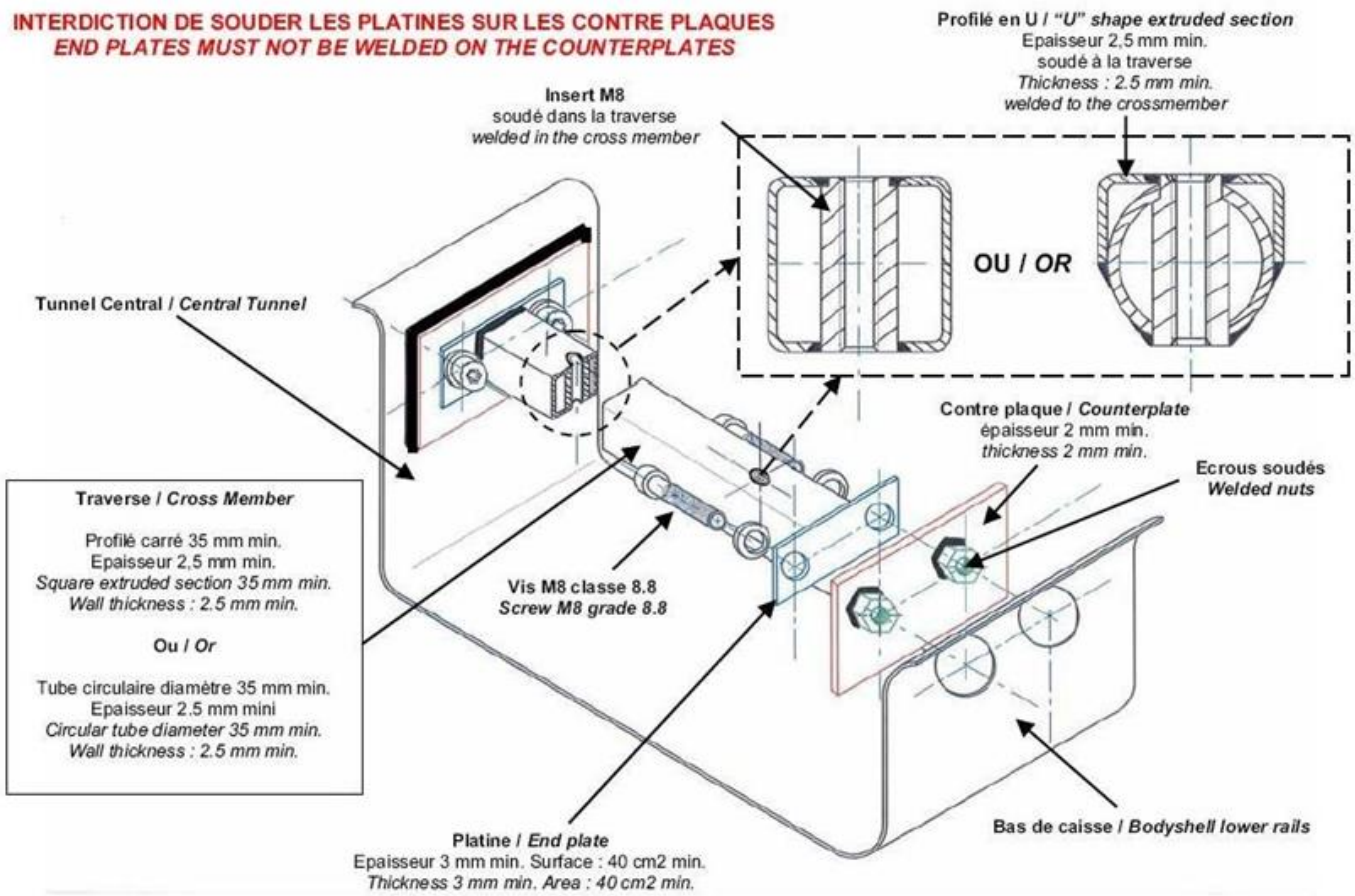

253-65B

FITTING INSTRUCTIONS

- 1- Drill holes (larger than nut outer diameter) in the bodyshell lower rail and in central tunnel wall.
- 2- Weld the nuts on the counter plates, then weld these on the bodyshell lower rail on the central tunnel wall.
- 3- Weld the 2 threaded inserts in the cross member, then weld the endplates at each end of the cross member.
- 4- Fix the assembly through 4 number of M8 bolts of grade 8.8 which are screwed in the welded nuts.

2) If OEM seat anchorage points are used on to fix the seat supports directly onto the shell/chassis:

It must follow the drawing 253-65 of FMSCI Art 253-Safety Equipment(Group N, A)

The seat supports must be attached directly to the OEM seat anchorage points on the body shell/chassis via at least 4mounting points per seat using bolts with minimum M8 of grade 8.8 and counter plates, according to the Drawing 253-65.

The minimum area of contact between support, shell/chassis and counter plate is 40 cm2 for each mounting point.

The minimum thickness of the seat supports and counter plates is 3 mm for steel and 5 mm for light alloy materials.

The minimum longitudinal dimension of each support is 6 cm.

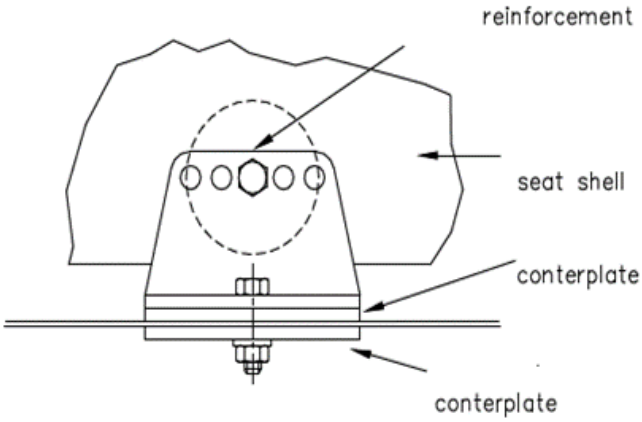

253-65

10.4-Fire Extinguisher

The minimum Quantity of Extinguishant for system mounted(plumbed in system) must be 3kg.

Manual Extinguishers

Minimum Quantity of Manual Extinguishant:

- AFFF 2.4liters
- FX G-TEC 2.0 kg
- Viro 3 2.0kg
- Zero360 2.0kg
- Powder 2.0kg

Fire Extinguishers to be rigidly fastened with a quick release clamps (minimum 2 nos.) fitted in an easily accessible and a visible position. The mounting bracket of the fire extinguisher must be bolted to the floor with a bolt of minimum 10 mm diameter. The minimum bracket thickness-2mm MS SHEET METAL

10.5-Protective Padding

Where the occupant’s bodies could come into contact with the safety cage, flame retardant padding as per FMSCI 2024 Safety Requirements for 4Wheeler must be provided for protection.

Art.11 – Data Acquisition

Fitting of additional Sensors are allowed, for data acquisition.

Data acquisition is permitted. Onboard cameras permitted, if used should be made available to Stewards on demand.

Live telemetry is allowed.

Two-way communication between Driver and Pit is allowed.

No communication of any sort between the drivers. Whether by radio, cellphone or by any other communication signals between one car to other once the car is on the track.

The drivers are not allowed to carry cell phones while on the track during the sessions. Violation of the above regulation will entail disqualification.

Art.12 – Hybrid System

Hybrid unit and its components must be rendered inoperative or be removed in full.

Note: If any ambiguity or missing data from the Homologation / TDF form, the FMSCI may source any component from the OE manufacturers to compare dimensions.

NOTE: Changes for the 2024 Technical Regulations are highlighted in Yellow

****END****